CC1485S-3

Specifications

Capacity	Maximum	6.0 t x 2.6m
Working radius	Maximum	16.1m
Lifting height	Maximum	16.7m x 2000 kg (22m x 820kg with Fly-Jib)
Pick & carry capacity	Maximum	2.0t
Dimensions	CC1485	6583mm x 2490mm x 2865mm (6623mm x 2905mm with pads)
Weight	CC1485 Hook block weight	14.610kg (+470 kg pads, +300 kg Fly-Jib, +680 kg blade) 90kg
Hook speed	Maximum	32/46 m/min. (4 falls, 4th layer)
Single line speed	Maximum	112/164 m/min. (4th layer)
Hoist rope	Standard	IWRC 6xFi (29) Ø 10mm x 115m
Telescopic system	Boom length Telescoping speed Boom type	4.745 m - 16.265 m 11.52 m / 33 sec Fully automatic 5 section heptagonal telescopic boom
Boom hoist system	Hoist angle / speed	-4° to 80° / 19 sec
Slew system	Slew angle / speed	360° continuous / 2.3rpm
Drive	Type	Independent steering controls, hydraulic piston motor with built-in automatic brake, planet reduction gears, sprocket and crawler.
Traction speed	Low High Gradability Ground length x width Ground pressure	0 – 1.9 km/h 0 – 3.2 km/h 20° 2880mm x 500mm (Track dimensions) 0.52 kgf / cm² 0,56 kgf/cm² (54,6 kPa) (with blade & Fly-Jib)
Engine	Model Emission level Type Rated output Starting method Fuel tank capacity	ISUZU 4LE2XBJB EU Stage V 4 cylinder diesel, water cooled, direct injection 44.6kW / 2000 rpm Electric Diesel/140L
Safe load indicator	Made specifically for Maeda Mini Cranes with a fully programmable working envelope.	
Standard equipment	Moment limiter, steel tracks, overwind protection, hydraulic safety valves, level, EMO switch, LED working status lamp, working light, hour meter, tilt alarm, air conditioning, 4-fall / 2-fall hook block, safety lock lever, rear view camera, data logger. Surround view camera & monitor.	
Optional equipment	Fly-Jib (820 kg), Single fall hook, Rubber pads, Spark arrestor Searcher hook (2.000kg capacity), Slew restriction device. Blade.	

CC1485/E/2026.10

Kranlyft Group

kranlyft.com

Mini Crawler Crane

CC1485S-3

- 6.0t x 2.6m Max Capacity
- 16.7m Max Lifting Height
- 16.1m x 430kg Max Working Radius



Kranlyft Group

kranlyft.com

Kranlyft Group

MAEDA Mini Cranes

The CC1485S-3 model boasts many market-leading features including a massive 6 ton lifting capacity, 16.3m boom, rear view camera and 7" monitor as standard. No outriggers and minimal tail swing mean an extremely slim working footprint.

The machine is equipped with an EU Stage V compliant engine.

- 6 ton max capacity
- 16.7m max working height 22m with optional fly jib
- 2000kg pick & carry duty
- Minimal tail swing
- Fully enclosed air-conditioned cab with link slide door
- 7 inch TFT multi monitor
- Powerful two speed winch with hydraulic disc brake
- 4 fall/2 fall hook block
- Tilt sensor,alarm
- Automatic heptagonal 5-section boom
- Data logger
- Working range setting for slew restriction
- Programmable moment limiter
- LED working lights
- Surround view camera & monitor
- Optional blade
- Optional searcher hook (2.0t)

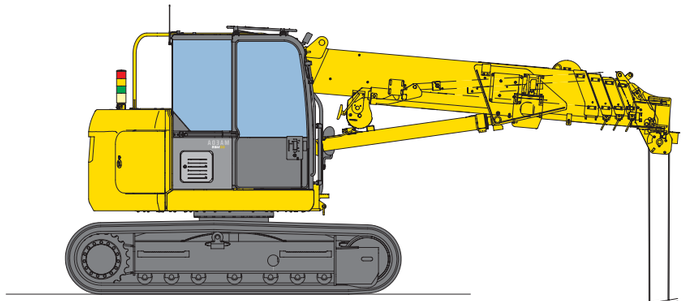

Working Range Chart (4 falls)

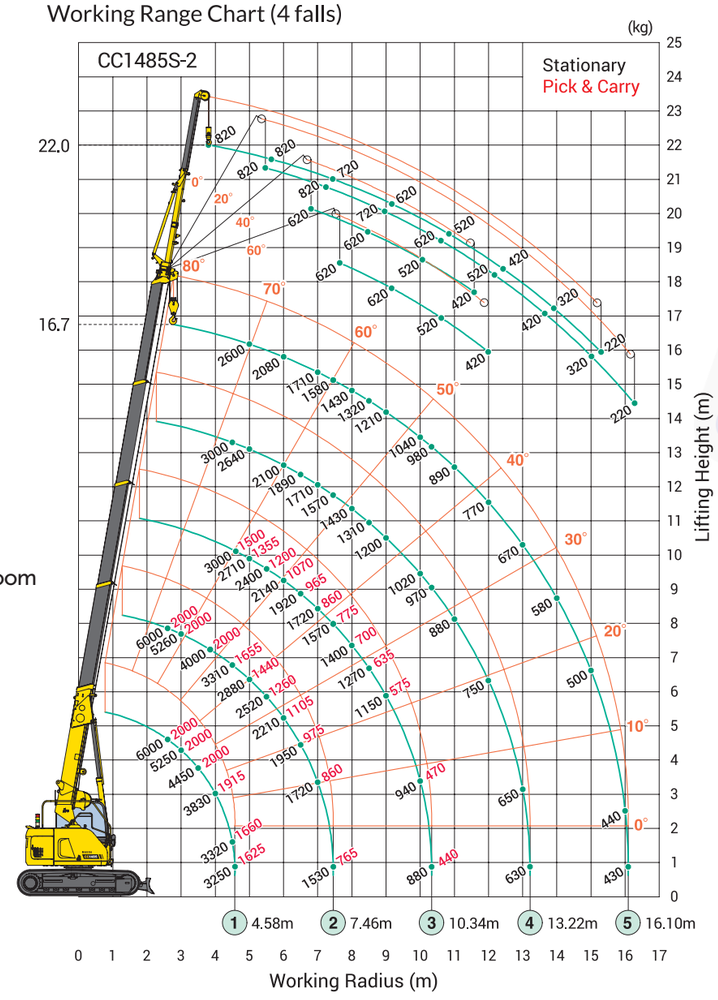

This working range chart shows total rated load including boom and jib deflection.



Total rated load

4.745m boom		7.625m boom		10.505m boom		13.385m boom		16.265m boom	
Working radius (m)	Total rated load(kg)	Working radius (m)	Total rated load(kg)	Working radius (m)	Total rated load(kg)	Working radius (m)	Total rated load(kg)	Working radius (m)	Total rated load(kg)
2	6000	2	6000	2	3000	2	N/A	2	N/A
2.5	6000	2.5	6000	2.5	3000	2.5	3000	2.5	N/A
2.6	6000	2.6	6000	2.6	3000	2.6	3000	2.6	N/A
3	5250	3	5260	3	3000	3	3000	3	2600
3.2	4910	3.2	4920	3.2	3000	3.2	3000	3.2	2600
3.5	4450	3.5	4460	3.5	3000	3.5	3000	3.5	2600
3.85	4000	3.85	4000	3.85	3000	3.85	3000	3.85	2600
4	3830	4	3820	4	3000	4	3000	4	2600
4.5	3320	4.5	3310	4.5	3000	4.5	3000	4.5	2600
		5	2880	5	2710	5	2640	5	2600
		6	2210	6	2140	6	2100	6	2080
		7	1720	7	1720	7	1710	7	1710
				7.5	1550	7.5	1560	7.5	1560
				8	1400	8	1430	8	1430
				9	1150	9	1200	9	1210
				10	940	10	1020	10	1040
						11	880	11	890
						12	750	12	770
						13	650	13	670
								14	580
								15	500
								16	440
								16.1	430

- The Total Rated Load Chart is based on the actual working radius including boom deflection. The weight of the hook block (standard 4 fall/2 fall -90kg) must be included as part of the load shown in the Total Rated Load Chart.
- When using two fall or single fall hooks,use the appropriate four fall Total Rated Load Chart above but with a maximum load of : Two fall-3000kg, Single fall-1500kg.

Pick & Carry Duties

4.745m boom		7.625m boom		10.505m boom	
Working radius (m)	Total rated load(kg)	Working radius (m)	Total rated load(kg)	Working radius (m)	Total rated load(kg)
2	2000	2	2000	2	1500
2.5	2000	2.5	2000	2.5	1500
2.6	2000	2.6	2000	2.6	1500
3	2000	3	2000	3	1500
3.2	2000	3.2	2000	3.2	1500
3.5	2000	3.5	2000	3.5	1500
3.85	2000	3.85	2000	3.85	1500
4	1915	4	1910	4	1500
4.5	1660	4.5	1655	4.5	1500
		5	1440	5	1355
		6	1105	6	1070
		7	860	7	860
				7.5	775
				8	700
				9	575
				10	470

Dimensions

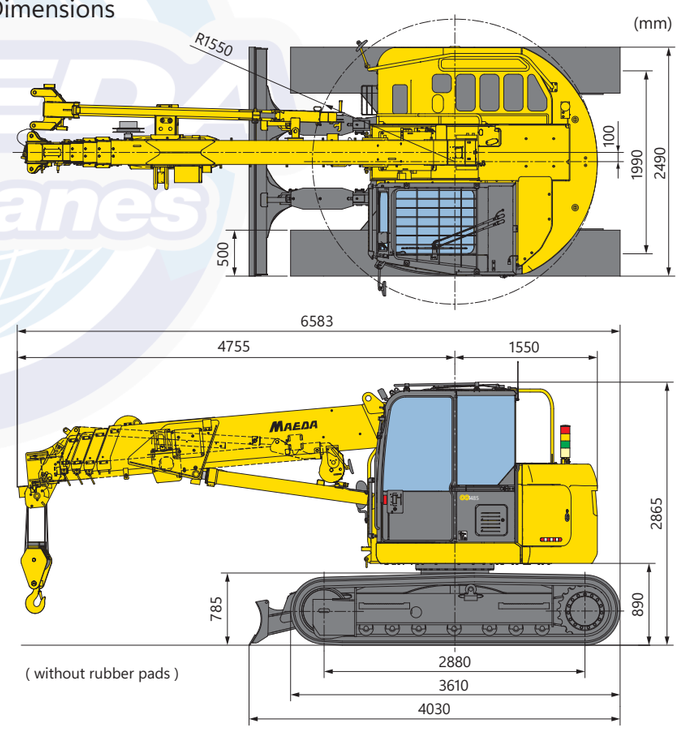

kranlyft.com