CC985S-3

Specifications

Capacity	Maximum	4.9t x 2.1m
Working radius	Maximum	14.67 m x 200kg
Lifting height	Maximum	16.5m x 1400kg (20.2m x 430kg with Fly-Jib)
Dimensions	CC985	5190mm x 2320mm x 2730mm (5220 × 2760 mm with rubber pads)
Weight	CC985 CC985 Hook block weight	9510kg (9690kg with fly-Jib) (10,090 w/blade & fly-jib) 90kg
Hook speed	Maximum	38m/min (4 layers, 4 falls)
Single line speed	Low speed High speed	116 m/min 152 m/min
Hoist rope	Type	IWRC 6 x Fi (29) Ø 10 mm x 115m
Telescopic system	Boom length Telescoping speed Boom type	4.78m – 15.78m 11m / 25sec. Fully automatic 5 section pentagonal telescopic boom
Boom hoist system	Hoist angle / speed	-2~80deg /13sec
Slew system	Slew angle / speed	360º continuous / 2.3 rpm
Drive	Type Traction Speed Gradability Ground length x width Ground pressure with rubber pads	Independent steering controls, hydraulic piston motor with built-in automatic brake, planet reduction gears, sprocket and crawler Low 0-1.9 km/h High 0-3.3 km/h 20° 2235mm x 450mm 0.49 kgf / cm² (0.52 kgf / cm² with blade & Fly-Jib)
Engine	Model Emission level Type Rated output Fuel tank capacity	ISUZU 4LE2XBJB EU Stage V 4 cylinder diesel, water cooled, direct injection 44.6kW / 2000 rpm Diesel / 140 L
Standard equipment	Programmable moment limiter, steel tracks, overwind protection, load indicator, hydraulic safety valves, level, EMO switch, LED working status lamp, safety lock lever, working light, hour meter, tilt alarm, 4-fall / 2-fall hook block, rear view camera, data logger.	
Optional equipment	Fly-Jib, Single fall hook, Rubber pads (black or white) weight 280kg, Spark arrestor, Radio remote control, Searcher hook (2t capacity), surround view camera & monitor, blade.	

CC985/E/2026.10

Kranlyft Group

kranlyft.com

Mini Crawler Crane

CC985S-3

- 4.9t x 2.1m Max Capacity
- 16.5m Max Lifting Height
- 14.67m x 200kg Max Working Radius



Kranlyft Group

kranlyft.com

The CC985S-3 crawler crane's improved standard features are programmable moment limiter, slew restriction setting and minimal tail swing. With a 16.5m working height, 7" multi function monitor and a massive 2000kg pick and carry capacity, this crane offers improved features coupled with great lifting duties.

Surround view camera & monitor, blade, and Searcher hook + Single fall hook are also optional features that improves daily work.

- 4.9 ton max capacity
- 16.5m max lifting height
  20.2m with optional fly jib attachment
- 2000kg pick & carry duty
- 7 inch multi monitor
- Powerful two speed winch
  with hydraulic disc brake
- 4-fall / 2-fall hook block
- Tilt sensor/alarm
- Rear view camera
- Automatic pentagonal 5-section boom
- Data logger
- Slew restriction setting
- Programmable moment limiter
- LED working lights
- Optional blade
- Optional surround view camera & monitor
- Optional searcher hook (2.0t) + single fall hook (1.5t)

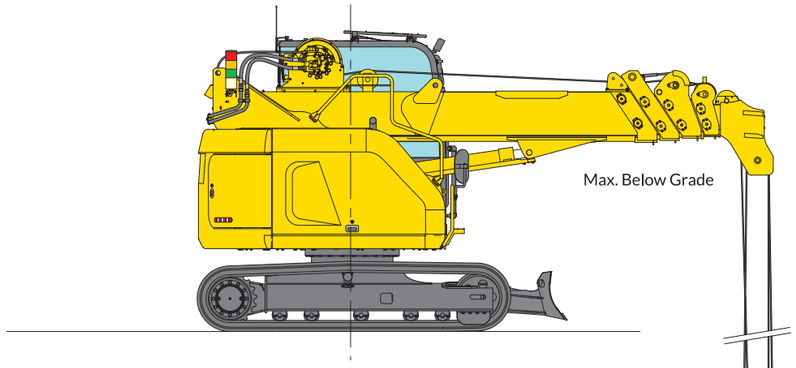

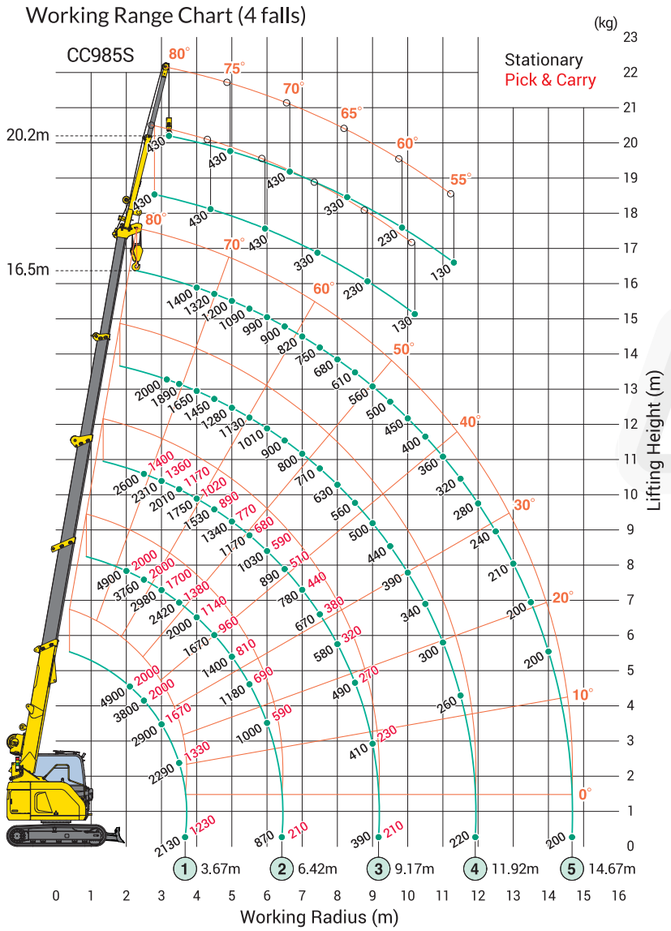

This working range chart shows total rated load including boom and jib deflection.

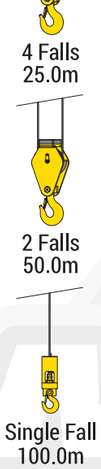

Total rated load (4 falls)

Working radius (m)	Total rated load (kg)									
	4.78m Boom		7.53m Boom		10.28m Boom		13.03m Boom		15.78m Boom	
	Stationary	Pick & Carry	Stationary	Pick & Carry	Stationary	Pick & Carry	Stationary	Pick & Carry	Stationary	Pick & Carry
2.0	4900	2000	4900	2000	2600	1400	2000			
2.1	4900	2000	4630	2000	2600	1400	2000			
2.5	3800	2000	3760	2000	2600	1400	2000		1400	
2.7	3310	1950	3410	1940	2520	1400	2000		1400	
3.0	2900	1670	2980	1700	2310	1360	2000		1400	
3.15	2640	1550	2800	1590	2220	1300	2000		1400	
3.5	2290	1330	2420	1380	2010	1170	1890		1400	
3.67	2130	1230	2270	1290	1920	1120	1800		1400	
4.0			2000	1140	1750	1020	1650		1400	
4.5			1670	960	1530	890	1450		1320	
5.0			1400	810	1340	770	1280		1200	
5.5			1180	690	1170	680	1130		1090	
6.0			1000	590	1030	590	1010		990	
6.42			870	510	910	520	910		920	
6.5					890	510	900		900	
7.0					780	440	800		820	
7.5					670	380	710		750	
8.0					580	320	630		680	
8.5					490	270	560		610	
9.0					410	230	500		560	
9.17					390	210	480		540	
9.5							440		500	
10.0							390		450	
10.5							340		400	
11.0							300		360	
11.5							260		320	
11.92							220		280	
12.0									280	
12.5									240	
13.0									210	
13.5									200	
14.0									200	
14.67									200	

Dimensions (mm)

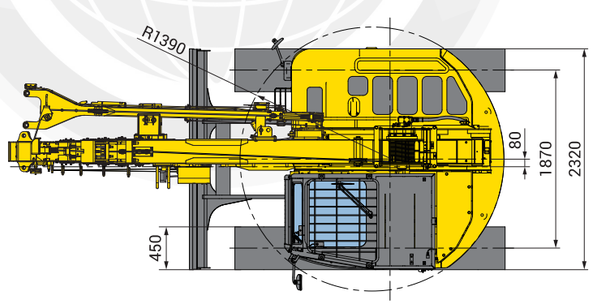

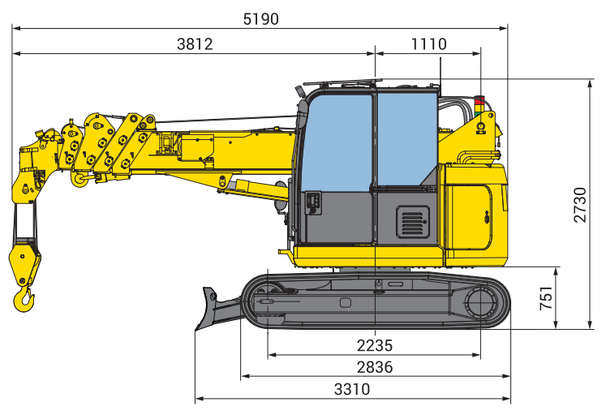

kranlyft.com