Klaas Rüdi121

Technical specifications

Work basket	
max. Basket capacity	250 kg
Work basket angle of rotation	max 180°
Large work basket	1.40 x 0.70 m

Boom	
Working height	21.00 m
Range to the rear (250 kg)	16.40 m
Range to the side (250 kg)	12.80 m
Swivel range	continuous rotation

V-Outriggers	
Outrigger length (max.)	4.14 m
Outrigger width (min.)	2.20 m
Outrigger width (max.)	front 4.50 m back 4.25 m
Outrigger width 1-sided support	3.35 m

Drive concept
PTO

Vehicle	
Clearance height	ca. 3.00 m
Total weight* (min.)	≥ 3.5 t

Available with a chassis based on the Iveco Daily or Mercedes Sprinter.

Boom

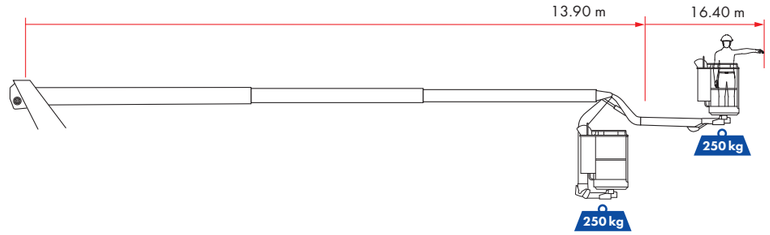

Outriggers

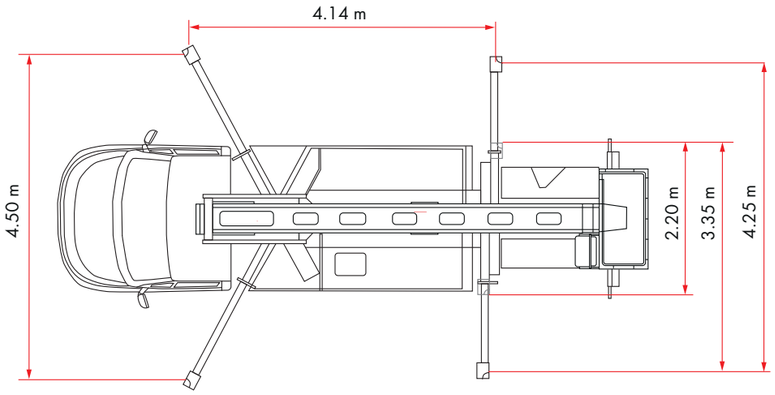

Vehicle (Iveco Daily))

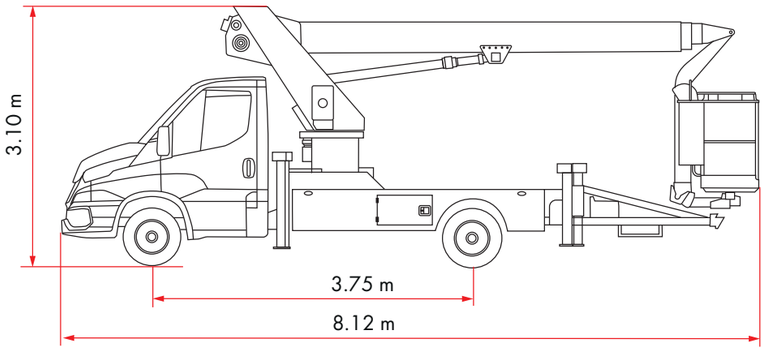

Subject to technical changes. All specifications are approximate. Changes to the functions and services are reserved.
The information reflects the device performance at the time of printing.

05/2026

Kranlyft Group

kranlyft.com/contact

Klaas Rüdi121



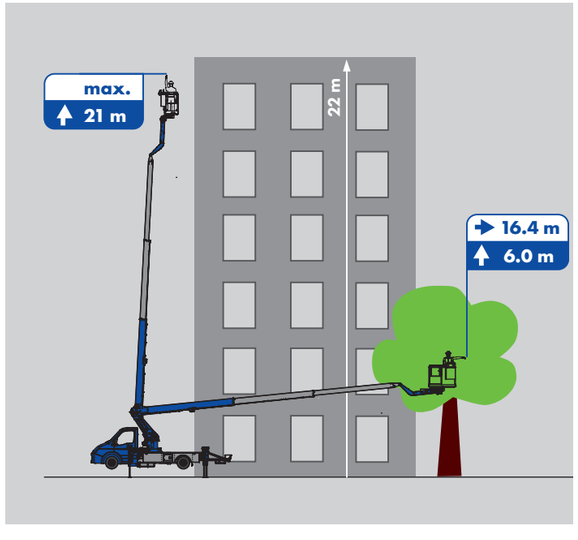



- 21 m Working Height
- 16.40 m Working radius with 250 kg
- Flexible boom with basket arm

05/2026

Working range diagram

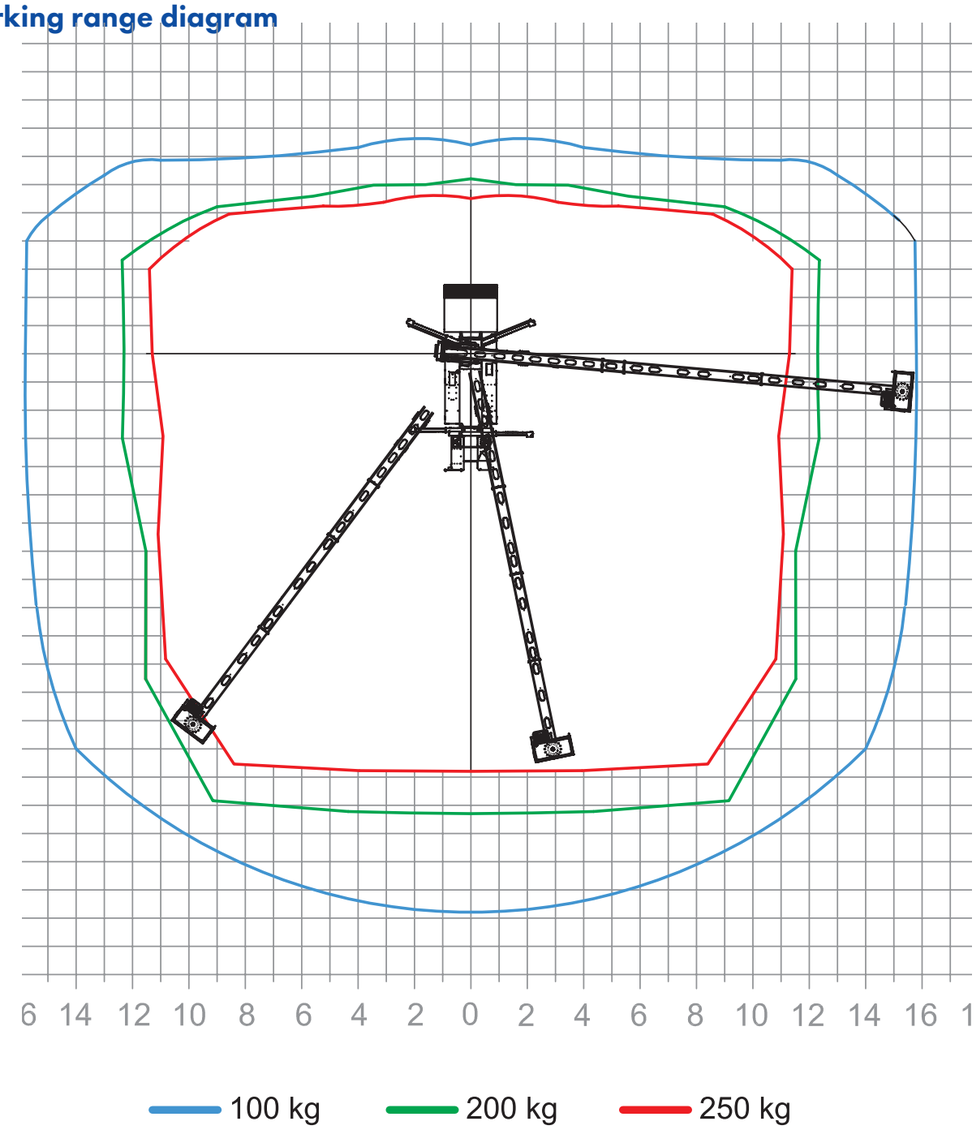



Working range diagram - Range to the rear

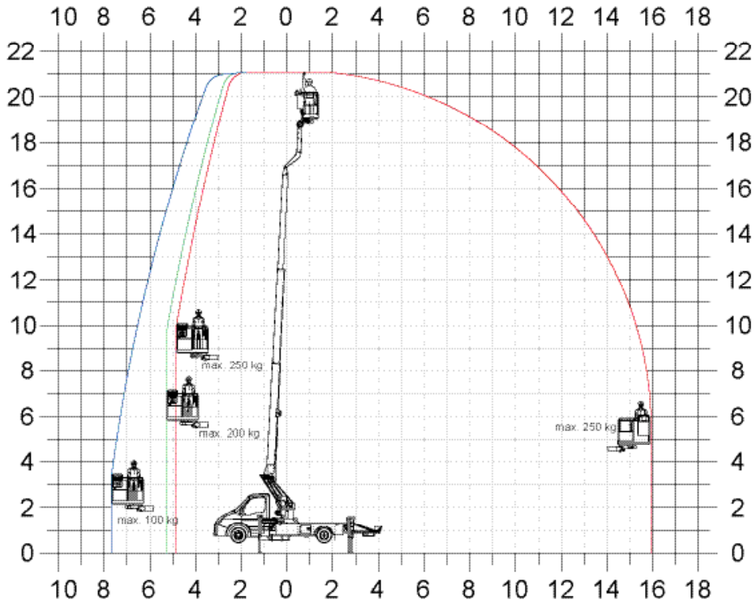

Range to the side

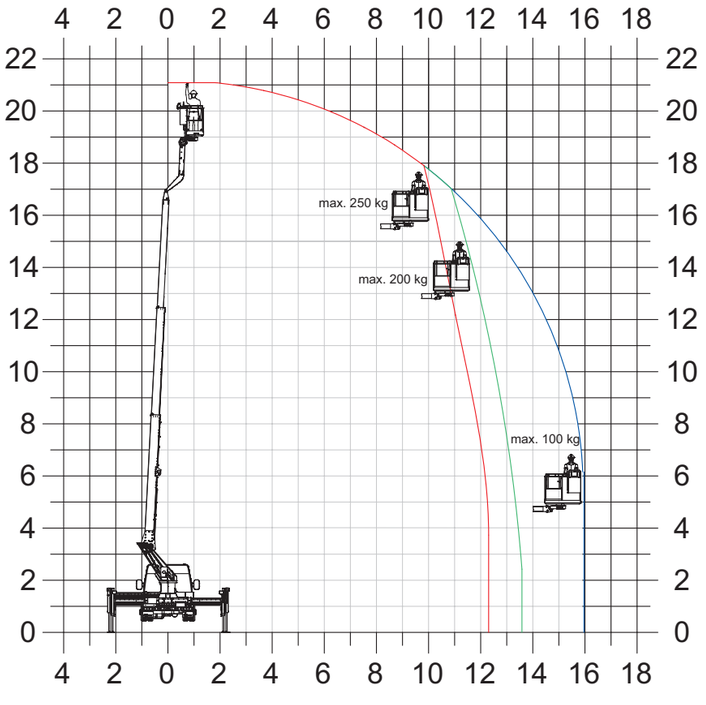

Working range to the rear

Load	Range	Height
100 kg	16.40 m	6.00 m
200 kg	16.40 m	6.00 m
250 kg	16.40 m	6.00 m
max. Working height		21.00 m

Working range to the side

Load	Range	Height
100 kg	16.40 m	4.00 m
200 kg	14.00 m	3.00 m
250 kg	12.80 m	4.00 m
max. Working height		21.00 m

Working range vary, depending on truck type.

Working range vary, depending on truck type.