Klaas K400



Working range

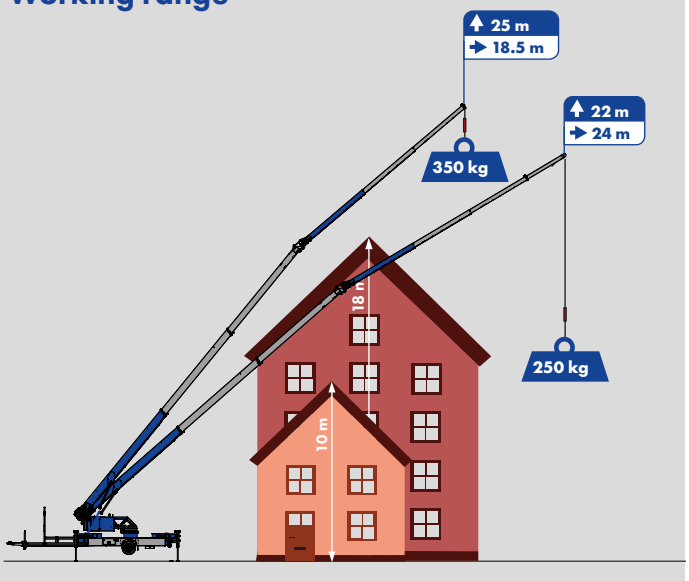



- Hook height 34.7 m / Boom length 35.9 m
- 24 m Working range with 250 kg
- Double Hydraulic telescopic fly jib

Working range diagram

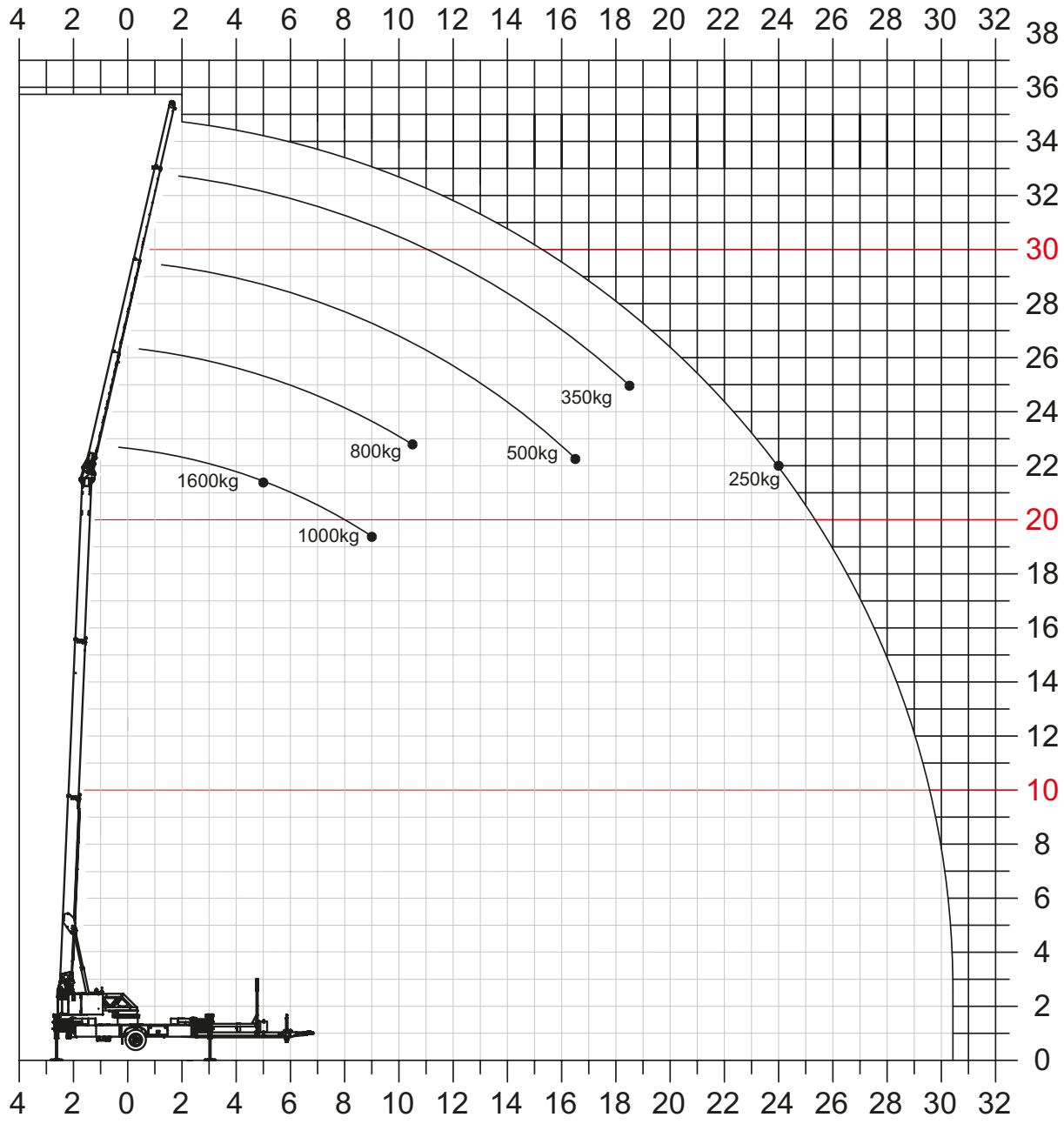

Working range crane operation

Load	Range	Height
250 kg	24.00 m	22.00 m
350 kg	18.50 m	25.00 m
500 kg	16.50 m	22.00 m
800 kg	10.50 m	22.50 m
1,000 kg	9.00 m	19.00 m
1,600 kg	5.00 m	21.00 m

Platform operation

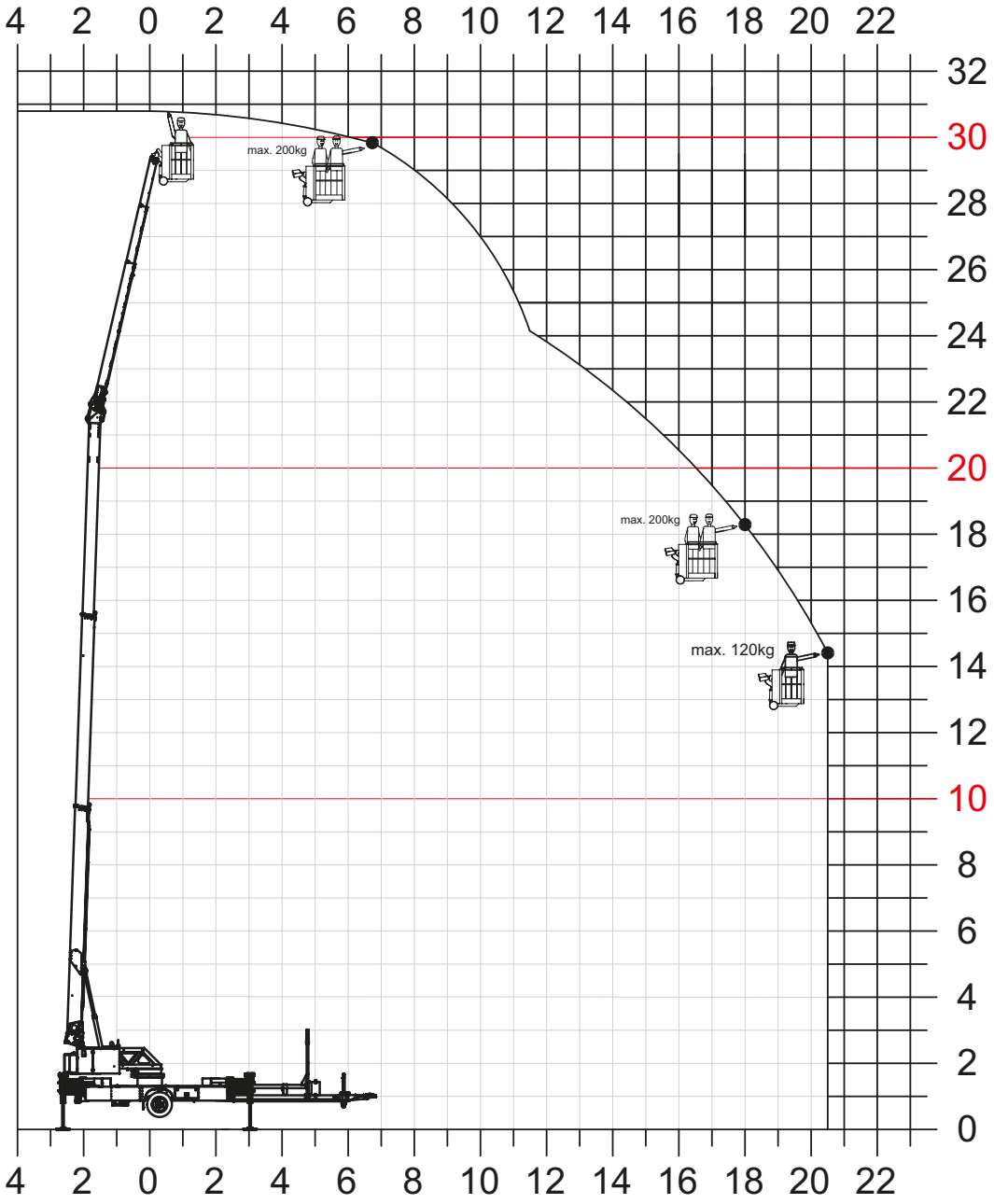

Working range HA 2/200

Load	Range	Height
120 kg	20.50 m	14.50 m
200 kg	18.00 m	18.00 m
Max. working height		30.80 m

Klaas K400

Technical specifications

Load capacity	
Hook load	1,600 kg
Winch capacity	1,600 kg

Boom	
Hook height	34.70 m
Boom length	35.90 m
Working height up to the boom	21.85 m
Swivel range	Continuous rotation

Fly jib	
Fly jib (1,600 kg)	5.10 m
Extension 1-2 (1,600 kg - 350 kg)	5.10 - 11.90 m
Extension 3 (250 kg)	14.00 m

V²-Outriggers	
Outriggers (max.) L x B	5.65 x 5.46 m
Outrigger width (min.)	3.71 m
Outrigger width 1-sided support	4.58 m

Drive concepts	
D	Diesel engine
RH	Hybrid drive

Vehicle	
Vehicle height	2.68 m
Vehicle width	2.36 m
Vehicle length	9.34 m
Towing capacity	3.5 t

Fly jib

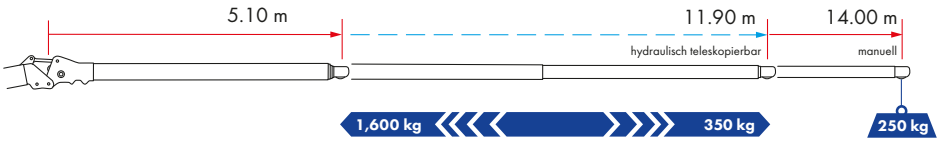

Outriggers

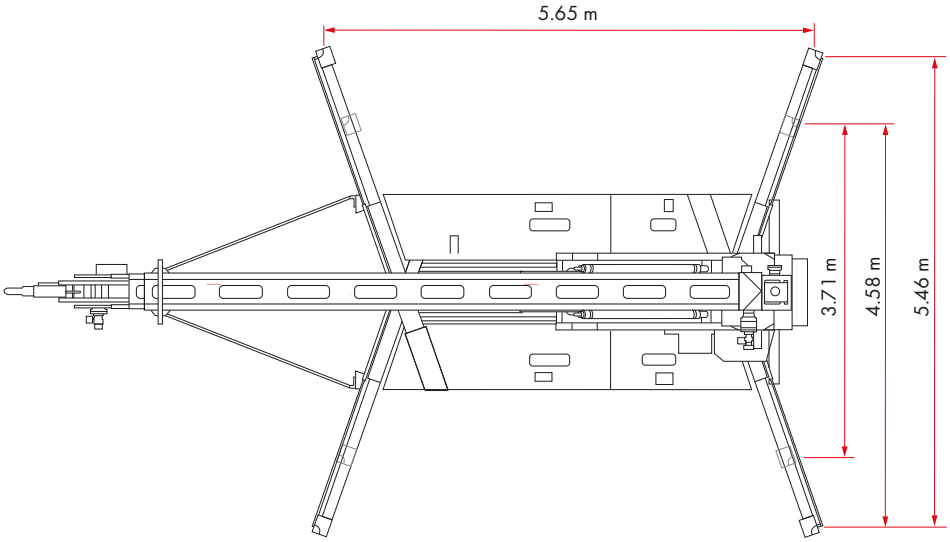

Vehicle

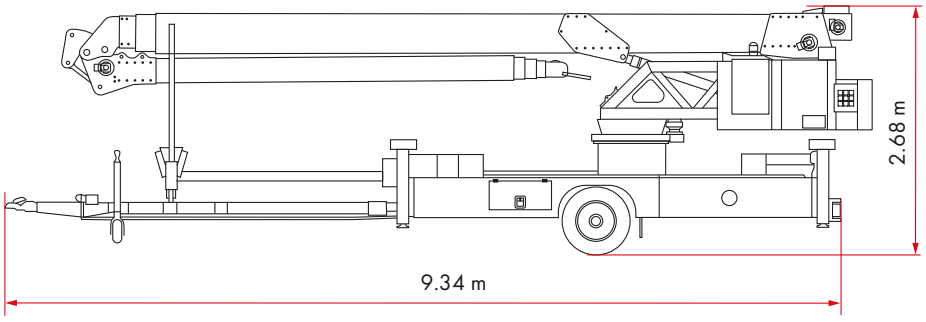

Subject to technical changes. All specifications are approximate and depending on truck type.
Changes to the functions and services are reserved. The information reflects the device performance at the time of printing.

11/2025

Kranlyft Group

kranlyft.com/contact